Acme Sanitary Ware Co Ltd
Acme Building, 22-28 Nanking Street, Kowloon, Hong Kong
Tel: 2388 7171 Fax: 2710 8012
E-mail: acme@acmesanitary.com.hk
Website: www. acmesanitaryware.com.hk

American Standard

PROJECT		REF		REV	ITEM CODE	
LOCATION		DATE			PAGE	

SANITARY WARE SPECIFICATION SHEET

Item Descriptions	American Standard (Thailand) "Rectangular" Acrylic shower tray with metal drain cover	Illustration/ Drawing
Dimensions	L1200 x W800 x H95 mm	
Model	TF7370	
Material / Color	Acrylic / White	
Manufacturer	American Standard (Thailand)	
Source	Acme Sanitary Ware Co. Ltd Mr. Eric Wong/ Mr. Don Yuen	
Contact Tel/Fax E-mail Website	(852) 2388-7171 / (852) 2710-8012 acme@acmesanitary.com.hk www.acmesanitary.com.hk	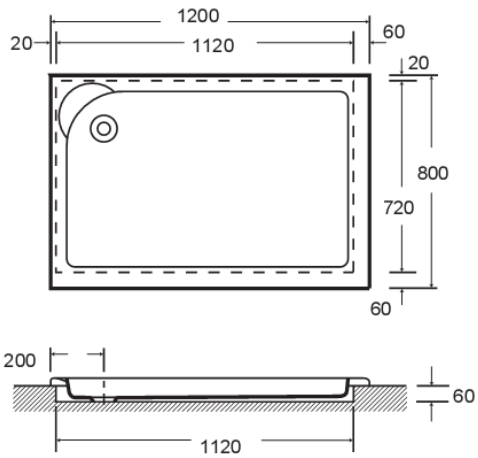

Note:

** All information of the above is for the reference only. No prior notice is made if any changes.*